GCAN-IO-8300

PROFINET Remote I/O Coupler

User Manual

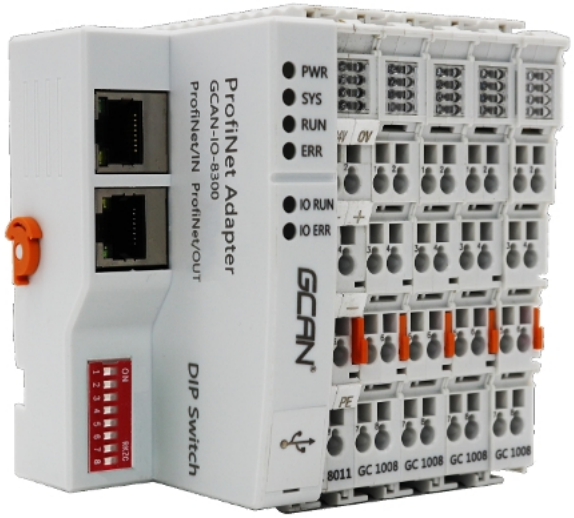

Document Version: V1.11 (2022/12/08)

English Translation and Editorial Work by Shenzhen MoCAN Electric Co., Ltd.

Revision History

Version	Date	Reason
V1.00	2019/08/16	Document created
V1.10	2022/04/25	Parameters corrected
V1.11	2022/12/08	Device operating parameters revised

Contents

Revision History 2
Contents 3
1. Function Introduction 4
  1.1 Functional Overview 4
  1.2 Features 4
  1.3 Typical Applications 5
2. Device Installation and Use 6
  2.1 Module Appearance and Dimensions 6
  2.2 Module Mounting 6
  2.3 Wiring Method 8
  2.4 System Status Indicators 9
3. Communication Connection 11
4. Technical Specifications 13
5. GC Series Module Selection Table 14
6. Disclaimer 15

1. Function Introduction

1.1 Functional Overview

The GCAN-IO-8300 PROFINET Remote I/O Coupler is a high-performance, general-purpose remote I/O module independently developed by our company based on the PROFINET bus. It helps users reduce costs, simplify wiring and improve system reliability. These I/O terminal modules can be expanded in a modular fashion. A complete node consists of one bus coupler, 1 to 32 terminal modules in any quantity, and one end terminal module. By using the GCAN-IO-8300 PROFINET Remote I/O Coupler with GC-bus expansion technology, I/O connections can be established very conveniently, with up to 32 input/output terminal modules supported. This I/O series is particularly suitable for centralized control applications with a large number of field points and a wide variety of signal types.

The GCAN-IO-8300 PROFINET Remote I/O Coupler can be used as a PROFINET slave for Siemens S7-200 SMART, S7-1200, S7-1500, S7-300 and other PLC series.

The GCAN-IO-8300 Remote I/O Coupler can connect to all bus terminal modules. As far as the user is concerned, analog input/output signals are handled in exactly the same way as other signal types. Information in the controller's process image is displayed in byte-array format. The GCAN-IO-8300 Remote I/O Coupler supports automatic configuration, so there is no need to set parameters on a PC.

1.2 Features

• Two PROFINET bus interfaces (RJ45);

• Bus transmission rate: 100 Mbps;

• Bus transmission distance (station-to-station spacing): 100 m;

• Maximum number of bus terminal modules: 32;

• Configuration method: automatic configuration;

• Power supply: 24 V DC (-15% / +20%);

• Current consumption: approximately 360 mA;

• Maximum current supplied to downstream I/O: approximately 740 mA;

• Electrical isolation: 1500 Vrms;

• Operating temperature range: -40 °C to +85 °C;

• Dimensions: length 100 mm × width 69 mm × height 48 mm.

1.3 Typical Applications

• Connect to distributed bus terminal modules to form a complete control node;

• Perform data acquisition and transmit data using the PROFINET protocol.

2. Device Installation and Use

This chapter describes in detail the installation method, wiring method, meaning of the indicators and meaning of the interfaces of the GCAN-IO-8300 PROFINET Remote I/O Coupler.

2.1 Module Appearance and Dimensions

The appearance of the GCAN-IO-8300 is shown in Figure 2.1. The GCAN-IO-8300 PROFINET Remote I/O Coupler contains two PROFINET communication interfaces, one USB interface, one set of coupler power terminals, two sets of I/O power terminals and two sets of shielding terminals. The USB interface can be used to upgrade the firmware.

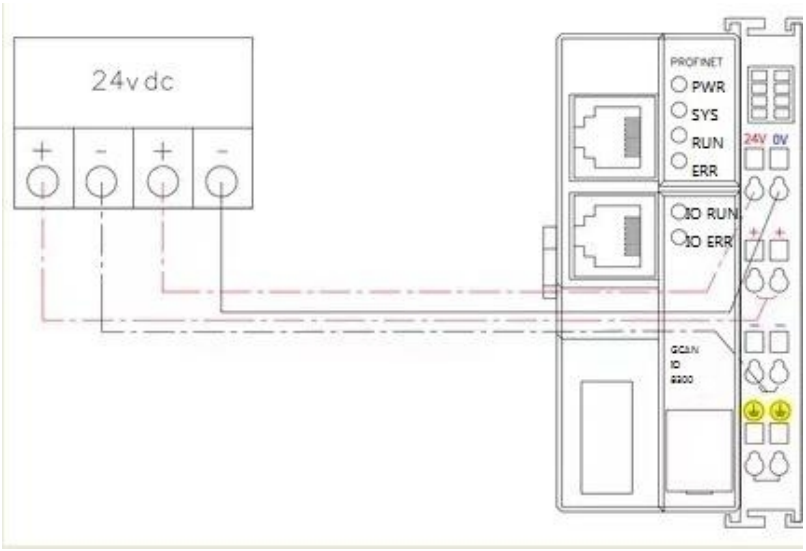

Figure 2.1 Appearance of the GCAN-IO-8300 PROFINET Remote I/O Coupler

2.2 Module Mounting

The mounting method of the GCAN-IO-8300 PROFINET Remote I/O Coupler is shown in Figure 2.2. You will need a flat-blade screwdriver to assist with the installation.

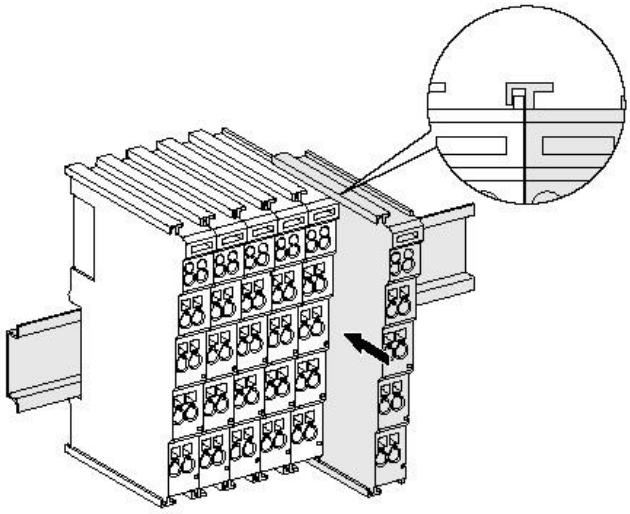

Figure 2.2 GCAN-IO-8300 PROFINET Remote I/O Coupler module installation

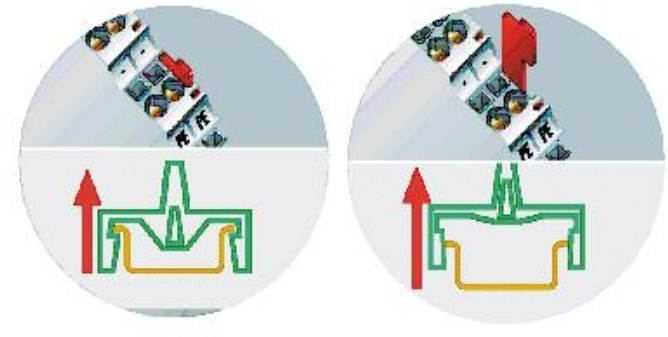

Figure 2.3 GCAN-IO-8300 PROFINET Remote I/O Coupler self-locking mechanism

Follow Figure 2.3 to mount the GCAN-IO-8300 PROFINET Remote I/O Coupler onto the DIN rail until the latch clicks firmly into place. The GCAN-IO-8300 PROFINET Remote I/O Coupler has a self-locking mechanism that effectively prevents the device from falling off. As shown in Figure 2.3, you can release the self-locking mechanism by pulling out the orange tab.

The GCAN-IO-8300 PROFINET Remote I/O Coupler can connect to up to 32 distributed bus terminal modules. When inserting bus terminal modules, always follow the groove and insert them one by one to the right of the existing modules until the latch clicks firmly into place. At the far right end of the node, you need to install the end terminal module.

2.3 Wiring Method

As shown in Figure 2.4, first insert a flat-blade screwdriver into the square hole, press against the upper edge of the metal plate inside the square hole, and push firmly toward the round hole. Then insert the cable into the round hole. Once inserted, pull out the screwdriver and the cable will be firmly locked in the round hole.

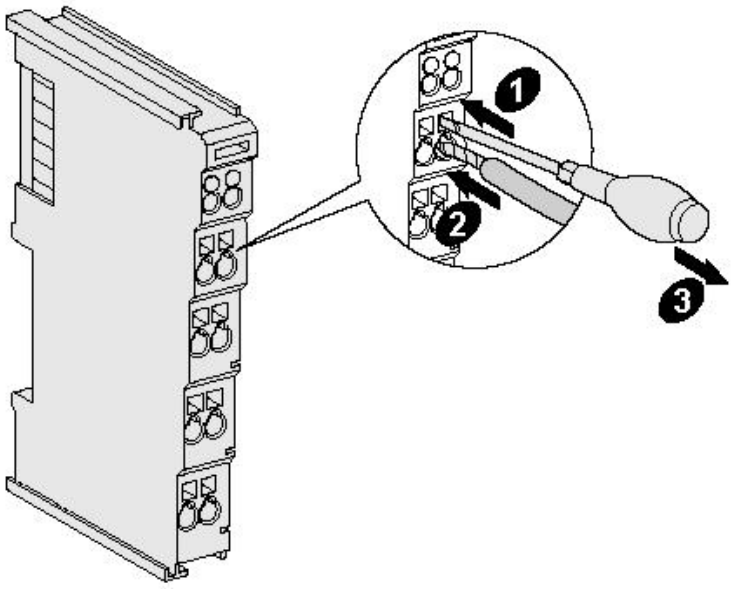

Figure 2.4 GCAN-IO-8300 PROFINET Remote I/O Coupler power supply wiring

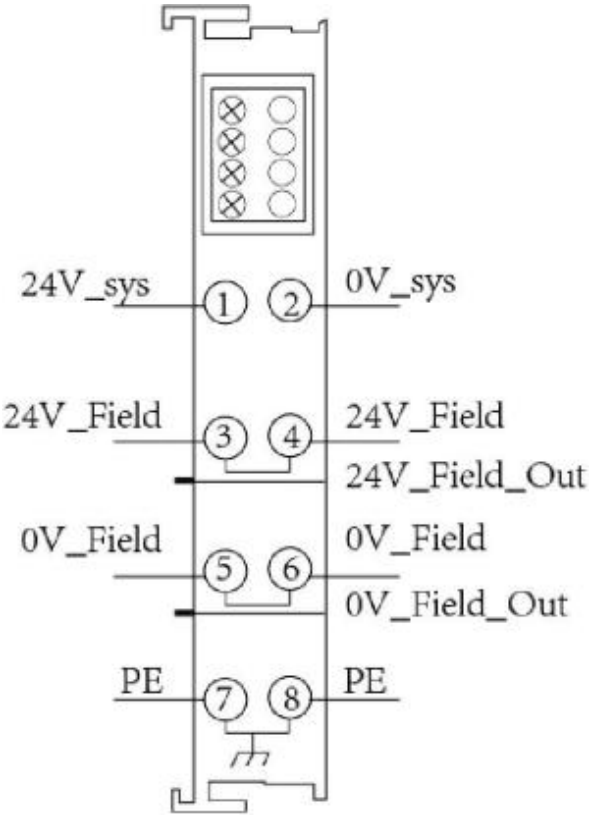

Figure 2.5 GCAN-IO-8300 PROFINET Remote I/O Coupler power supply terminal block

The power supply terminal block of the GCAN-IO-8300 PROFINET Remote I/O Coupler is shown in Figure 2.5. The GCAN-IO-8300 PROFINET Remote I/O Coupler contains 8 terminals; the corresponding terminal numbers and their meanings are shown in Table 2.1. Note that terminals 3 and 4, terminals 5 and 6, and terminals 7 and 8 are internally connected within the module.

Terminal	No.	Meaning
24V_sys	1	24 V power input
0V_sys	2	Power GND
24V_Field	3	I/O power positive
24V_Field	4	I/O power positive
0V_Field	5	I/O power negative
0V_Field	6	I/O power negative
PE	7	Shielding
PE	8	Shielding

Table 2.1 Definition of the power supply terminals of the GCAN-IO-8300 PROFINET Remote I/O Coupler

2.4 System Status Indicators

The GCAN-IO-8300 PROFINET Remote I/O Coupler has two groups of status indicators. The left area contains six round status indicators and the right area contains two small power indicators. The specific indication functions are shown in Table 2.3. When the indicators are in different states, the status of the GCAN-IO-8300 module is shown in Table 2.4.

Indicator	Color	Indication
PWR	Green	Power indication
SYS	Green	System indication
RUN	Green	Run indication
ERR	Red	Error indication
IO RUN	Green	Internal bus run indication
IO ERR	Red	Internal bus error indication
Right position 1	Green	Power indication
Right position 3	Green	Internal bus power indication

Table 2.3 Indicators of the GCAN-IO-8300 PROFINET Remote I/O Coupler

Indicator	State	Indication
PWR	Steady on	Power supply normal

PWR	Off	Power supply abnormal
SYS	Blinking	Device initialization passed, entering working state
SYS	Off	Device initialization failed
RUN	Blinking	Device running normally
RUN	Off	Device stopped
ERR	Steady on	System error
ERR	Off	No system error
IO RUN	Blinking	Internal bus running normally
IO RUN	Off	Internal bus stopped
IO ERR	Steady on	Internal bus running error
IO ERR	Off	No internal bus running error
Right position 1	Steady on	Terminal-side power supply normal
Right position 1	Off	Terminal-side power supply abnormal
Right position 3	Steady on	Terminal internal bus power supply normal
Right position 3	Off	Terminal internal bus power supply abnormal

Table 2.4 Indicator states of the GCAN-IO-8300 PROFINET Remote I/O Coupler

3. Communication Connection

The GCAN-IO-8300 PROFINET Remote I/O Coupler uses an Ethernet CAT5 cable (Category 5 twisted pair) to connect to the PROFINET master and other slave devices. The GCAN-IO-8300 PROFINET Remote I/O Coupler is equipped with two RJ45 interfaces, allowing users to conveniently insert the GCAN-IO-8300 PROFINET Remote I/O Coupler into the PROFINET bus.

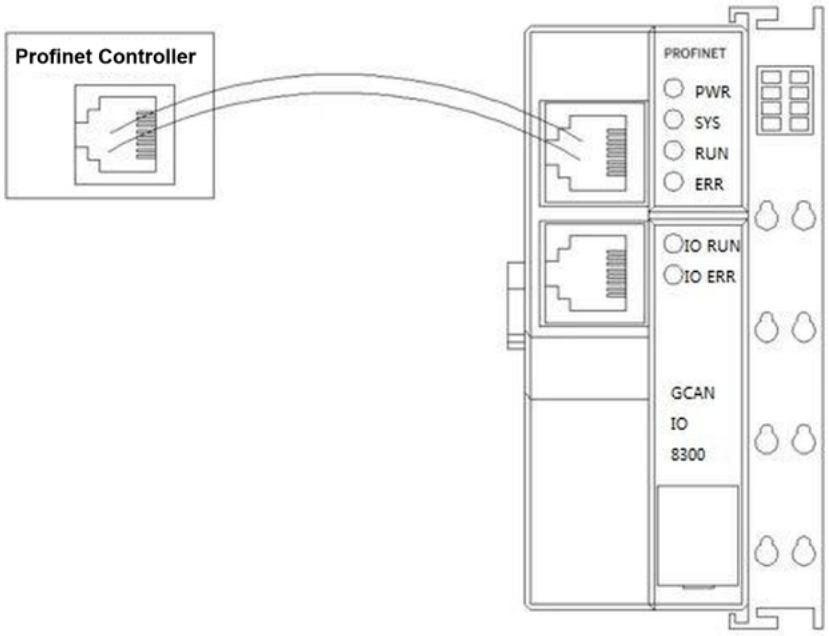

Figure 3.1 GCAN-IO-8300 PROFINET Remote I/O Coupler connected to a PROFINET controller

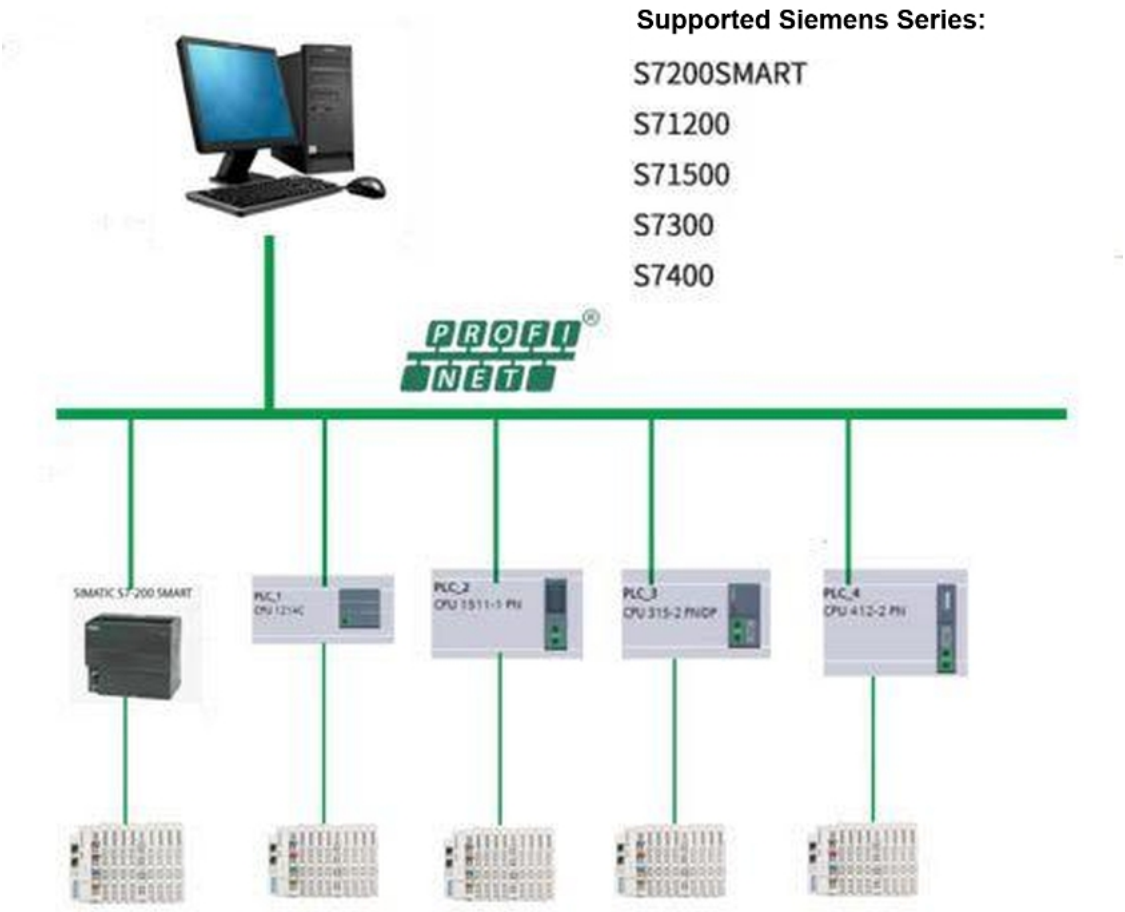

Figure 3.2 GCAN-IO-8300 PROFINET Remote I/O Coupler with multiple PROFINET controllers connected to the bus

4. Technical Specifications

Category	Item	Specification
Interface features	Connection method	2 × RJ45
	Transmission medium	Ethernet CAT5 cable
	Transmission distance	100 m station-to-station spacing
	Transmission rate	100 Mb/s
Technical parameters	Number of bus terminal modules	32
	Maximum bytes of fieldbus	340 bytes input and 340 bytes output
	Configuration method	Automatic configuration
	Power input	24 V DC (-15% / +20%)
	Current consumption	approximately 360 mA
Technical parameters	Maximum downstream I/O supply	approximately 740 mA
	Electrical isolation	1500 Vrms
	Operating temperature	-40 °C to +85 °C
	Operating humidity	95% RH, non-condensing
	EMC test	EN 55024:2011-09, EN 55022:2011-12
	Vibration / shock resistance	EN 60068-2-6 / EN 60068-2-27/29
General information	Anti-interference / anti-radiation	EN 61000-6-2 / EN 61000-6-4
	Protection class	IP 20
	Dimensions	100 mm × 69 mm × 44 mm
	Weight	100 g

5. GC Series Module Selection Table

The GCAN-IO-8300 alone cannot perform complete control functions. A complete control system consists of one bus module controller, several GC series terminal modules and one end terminal module (GC-0001). The GC series terminal modules must be purchased separately from our company, while the end terminal module is supplied free of charge with the GCAN-IO-8300.

The GC series programmable controller expansion modules currently include four categories: digital input expansion modules, digital output expansion modules, analog input expansion modules and analog output expansion modules. The specific selection table is shown below.

Category	Model	Feature	Signal	Channels
Digital input	GC-1008	Basic digital	24 V DC	8 channels
	GC-1502	Counter (100 kHz max)	-	2 channels
Digital output	GC-2008	Basic digital	24 V DC	8 channels
	GC-2204	Relay output	-	4 channels
	GC-2302	PWM (20 Hz - 20 kHz)	-	2 channels
Analog input	GC-3604	Voltage input, 16-bit	-5 V to +5 V	4 channels
	GC-3624	Voltage input, 16-bit	-10 V to +10 V	4 channels
	GC-3644	Current input, 16-bit	0-20 mA	4 channels
	GC-3654	Current input, 16-bit	4-20 mA	4 channels
	GC-3664	Voltage input, 16-bit	0 to +5 V	4 channels
	GC-3674	Voltage input, 16-bit	0 to +10 V	4 channels
	GC-3804	2-wire PT100, 16-bit	RTD	4 channels
	GC-3822	3-wire PT100, 16-bit	RTD	2 channels
	GC-3844/3854/3864	K / S / T type thermocouple	Thermocouple	4 channels
Analog output	GC-4602	Voltage output, 16-bit	-5 V to +5 V	2 channels
	GC-4622	Voltage output, 16-bit	-10 V to +10 V	2 channels
	GC-4642	Current output, 16-bit	0-20 mA	2 channels
	GC-4652	Current output, 16-bit	4-20 mA	2 channels
	GC-4662	Voltage output, 16-bit	0 to 5 V	2 channels
	GC-4672	Voltage output, 16-bit	0 to 10 V	2 channels

6. Disclaimer

Thank you for purchasing GCAN series hardware and software products.

1. Copyright and Translation Notice

The original Chinese-language version of this document was prepared by Shenyang Guangcheng Technology Co., Ltd., which retains the copyright to the original document and its contents.

This English version has been independently translated and prepared by Shenzhen MoCAN Electric Co., Ltd. based on its understanding of the original Chinese documentation. It is intended solely for overseas customer reference and technical support purposes. It has not been officially reviewed, verified or approved by Shenyang Guangcheng Technology Co., Ltd., and should not be regarded as an official or authoritative English version of the original documentation.

The English translation, editorial work and original layout elements created by Shenzhen MoCAN Electric Co., Ltd. are protected by applicable copyright laws. No part of this English version may be reproduced, redistributed, republished or used for commercial purposes without prior written permission from Shenzhen MoCAN Electric Co., Ltd., except as permitted by applicable law.

GCAN is a registered trademark of Shenyang Guangcheng Technology Co., Ltd.

2. Product Information and User Responsibility

Product specifications, technical parameters, functions and other information provided in this document are for reference purposes and may be subject to change without prior notice.

Users are responsible for evaluating the suitability of the products for their specific applications and ensuring proper installation, configuration and operation in accordance with the relevant technical documentation and applicable safety requirements.

For product selection, technical clarification or application-specific requirements, users are advised to consult the manufacturer or an authorized supplier before making purchasing or implementation decisions.

3. Interpretation

This English document is provided as a reference translation of the original Chinese-

language documentation. While reasonable efforts have been made to ensure the accuracy and completeness of the translation, the original Chinese-language version shall prevail in the event of any discrepancy or inconsistency between the two versions.