GCAN-208 Series

CAN-Bus Fiber Optic Repeater

User Manual



Document Version: V4.30 (2024/12/30)

English Translation and Editorial Work by Shenzhen MoCAN Electric Co., Ltd.

Revision History

Version	Date	Reason
V1.00	2014/12/10	Document created
V2.01	2015/03/20	Device operating parameters corrected
V3.01	2015/08/04	Some parameters added
V3.50	2018/07/18	Document structure adjusted; automatic baud-rate detection added
V3.51	2018/05/21	Some parameters corrected
V4.00	2020/11/21	Ring-network function added
V4.10	2022/05/06	Some descriptions corrected
V4.20	2022/05/18	Product appearance changed
V4.21	2022/10/25	Document corrected
V4.22	2023/02/20	Ingress protection rating added
V4.23	2024/06/01	Contact information updated
V4.30	2024/12/30	Application diagrams and test data added

Contents

Revision History 2
Contents 3
1. Function Introduction 5
1.1 Overview 5
1.2 Features 5
1.2.1 Hardware Features 5
1.2.2 CAN Characteristics 5
1.2.3 Fiber-Optic Characteristics 6
1.3 Model Selection Guide 6
1.4 Typical Applications 7
1.5 Typical Application Diagrams 8
1.6 Functional Features 10
2. Device Installation 12
2.1 Device Dimensions 12
2.2 Device Mounting 12
2.3 Interface Definition and Functions 13
2.3.1 GCAN-208-1 Module 13
2.3.2 GCAN-208-2 Module 15
3. Device Usage 16
3.1 CAN-Bus Configuration 16
3.1.1 Configuring the CAN-Bus Baud Rate with DIP Switches 16
3.1.2 Automatic Baud-Rate Detection 17
3.1.3 Checking the Current Baud Rate of the Device 18
3.1.4 Modifying the Device Baud Rate 19
3.1.5 Configuring the CAN-Bus Terminating Resistor 19
3.2 Fiber-Optic Connection 19
3.3 CAN-Bus Connection 20
3.4 CAN-Bus Terminating Resistor 20
3.5 System Status LEDs 21
4. Technical Specifications 22
5. Frequently Asked Questions 22
1. Is a 120 ohm terminating resistor always required? 22
2. Can multiple GCAN-208 series modules be installed on one CAN bus? 22

3. What is the maximum data conversion rate of the GCAN-208 series modules? 23
4. Why are the FIB and CAN LEDs off? 23
5. How is the communication baud rate of the GCAN-208 series modules set? 23
6. Does the system entering standby or sleep mode affect reception? 23
6. Disclaimer 24
Copyright and Translation Notice 24
Product Information and User Responsibility 24
Interpretation 24

1. Function Introduction

1.1 Overview

The GCAN-208 series modules from Shenyang Guangcheng Technology Co., Ltd. are industrial-grade CAN-bus-to-fiber converters integrating one (or two) standard fiber-optic interface(s) (single-mode or multimode; SC, ST or FC optional) and two (or one) standard CAN-bus interface(s).

GCAN-208 series modules convert CAN-bus data into optical signals transparently and without loss, and then restore the optical signals to CAN-bus data transparently and without loss. Guangcheng Technology's proprietary bus-signal conversion technology keeps the conversion time between CAN data and optical signals at the microsecond level, ensuring real-time communication. The GCAN-208 supports any CAN-bus communication protocol, such as CANopen, SAE J1939, DeviceNet and NMEA 2000.

The unique dual-channel design of the GCAN-208-1 can extend the communication distance of two CAN buses simultaneously. The GCAN-208-2 has two fiber-optic interfaces and can be used for cascading. This series is a key tool for industrial fieldbus modernization, long-distance communication and isolation from bus interference. Each CAN-bus interface integrates an isolation protection module to prevent damage from transient overvoltage or overcurrent and to protect the bus and equipment from electromagnetic interference, ground-loop interference and lightning.

The product has been widely used over a long period in systems from leading fire-alarm and building-automation manufacturers, including GST, Lida, Qingniao, Siemens, Yiai, Fanhai Sanjiang, Taihe'an, Fuan, Hao'an Security Technology and Qingdao Haihuide Electric.

1.2 Features

1.2.1 Hardware Features

• High-speed 32-bit industrial-grade processor

• Embedded hardware watchdog timer

• Reverse-polarity protection; external power supply 9-36 V DC; 50 mA maximum at 24 V DC

• Operating temperature range: -40°C to +85°C

• Electrostatic discharge immunity: contact discharge +/-4 kV, air discharge +/-8 kV

• Electrical fast transient burst immunity: +/-2 kV

• Surge immunity: power interface +/-1 kV, CAN-bus interface +/-4 kV

• Designed to meet requirements for mining product safety certification, fire product certification, automotive intelligent networking and energy storage; documentation required for certification can be provided

1.2.2 CAN Characteristics

• Integrates two (or one) CAN-bus interface(s) using terminal-block wiring

• CAN-bus signals: CAN_H, CAN_L and EARTH

• Integrated 120 ohm terminating resistor, selectable by DIP switch

• Supports CAN 2.0A and CAN 2.0B frame formats, compliant with ISO/DIS 11898

• CAN-bus baud rate from 5 kbps to 1 Mbps, configurable by DIP switch; the two CAN channels can be set independently

• CAN-bus interface electrically isolated; isolation withstand voltage 3000 V DC

• Maximum throughput per channel: 8000 frames/s (tested at 1 Mbps with standard frames)

1.2.3 Fiber-Optic Characteristics

• Fiber-optic interfaces: SC, ST or FC optional

• Fiber transmission mode: single-mode or multimode optional

• Fiber count: single-fiber or dual-fiber optional

1.3 Model Selection Guide



Figure 1.1 GCAN-208 series models

Item	GCAN-208-1	GCAN-208-2	GCAN-208-2 F
Typical application	Must be used in pairs. Two CAN buses can be repeated independently over fiber at the same time. CAN1 corresponds to CAN1 and CAN2 to CAN2; CAN1 and CAN2 are not interconnected.	Several GCAN-208-2 units installed between a pair of GCAN-208-1 units enable CAN-bus cascading.	Several GCAN-208-2 F units can form a fiber-optic ring network. If one node drops out, communication between the other nodes is not affected.
Fiber channels	1	2	2
CAN channels	2	1	1
Power supply	9-36 V DC	9-36 V DC	9-36 V DC
Operating current	50 mA max. (24 V DC)	50 mA max. (24 V DC)	50 mA max. (24 V DC)
Power interface	OPEN3 terminal block	OPEN3 terminal block	OPEN3 terminal block
Configuration	Hardware DIP switches, auto-detection	Hardware DIP switches, auto-detection	Hardware DIP switches, auto-detection
Fiber connector	ST / SC / FC optional (specify when ordering)	ST / SC / FC optional (specify when ordering)	ST / SC / FC optional (specify when ordering)
Fibers per interface	Single-fiber / dual-fiber optional (specify when ordering)	Single-fiber / dual-fiber optional (specify when ordering)	Single-fiber / dual-fiber optional (specify when ordering)
Fiber type	Single-mode / multimode optional (specify when ordering)	Single-mode / multimode optional (specify when ordering)	Single-mode / multimode optional (specify when ordering)

Item	GCAN-208-1	GCAN-208-2	GCAN-208-2 F
Fiber wavelength	1310 nm / 1510 nm	1310 nm / 1510 nm	1310 nm / 1510 nm
Transmission distance	20 km single-mode	20 km single-mode	20 km single-mode
CAN standard	Supports CAN 2.0A and CAN 2.0B, compliant with ISO/DIS 11898	Supports CAN 2.0A and CAN 2.0B, compliant with ISO/DIS 11898	Supports CAN 2.0A and CAN 2.0B, compliant with ISO/DIS 11898
CAN baud rate	5 kbps - 1 Mbps	5 kbps - 1 Mbps	5 kbps - 1 Mbps
Maximum frame throughput	8000 frames/s per channel (1 Mbps, standard frame test)	8000 frames/s per channel (1 Mbps, standard frame test)	8000 frames/s per channel (1 Mbps, standard frame test)
Forwarding delay	Approx. 30 us	Approx. 30 us	Approx. 30 us
Network delay	Approx. 200 us (1 Mbps, standard frame, 8-byte data test)	Approx. 200 us (1 Mbps, standard frame, 8-byte data test)	Approx. 200 us (1 Mbps, standard frame, 8-byte data test)
Terminating resistor	Integrated, enabled by DIP switch	Integrated, enabled by DIP switch	Integrated, enabled by DIP switch
Isolation	Power 1500 V DC; CAN bus 3000 V DC	Power 1500 V DC; CAN bus 3000 V DC	Power 1500 V DC; CAN bus 3000 V DC
EMC	ESD contact +/-4 kV, air +/-8 kV; surge +/-1 kV; burst +/-2 kV	ESD contact +/-4 kV, air +/-8 kV; surge +/-1 kV; burst +/-2 kV	ESD contact +/-4 kV, air +/-8 kV; surge +/-1 kV; burst +/-2 kV
Safety	CE-EMC, IEC/EN 61000-4-2/4/5	CE-EMC, IEC/EN 61000-4-2/4/5	CE-EMC, IEC/EN 61000-4-2/4/5
Operating temperature	-40°C to +85°C	-40°C to +85°C	-40°C to +85°C
Mounting	Wall mounting, DIN-rail mounting	Wall mounting, DIN-rail mounting	Wall mounting, DIN-rail mounting

1.4 Typical Applications

- CAN-bus communication modernization
- Long-distance CAN-bus communication across bodies of water
- CAN-bus interference immunity retrofit in high-interference areas such as wind turbines
- Long-distance communication between a control room and buildings
- Fire-alarm system networking
- Long-distance distributed communication systems
- New-energy energy-storage systems

1.5 Typical Application Diagrams

GCAN-208-1 typical application: paired point-to-point use

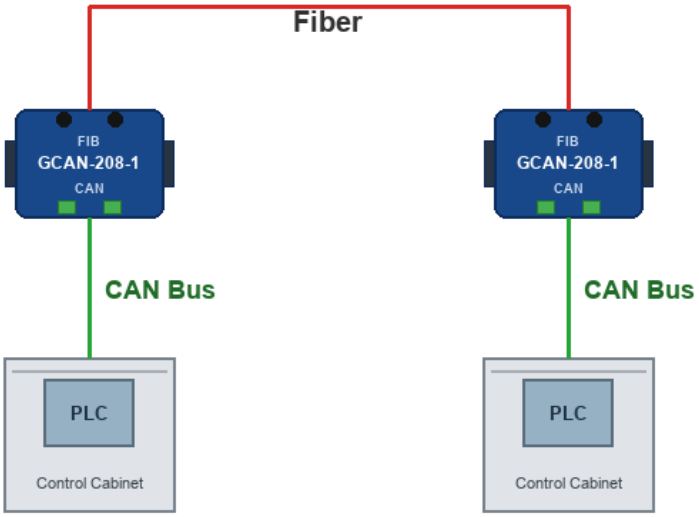

Figure 1.2 Paired point-to-point application of the GCAN-208-1

Note: In paired point-to-point use, CAN1 corresponds to CAN1 and CAN2 to CAN2; CAN1 and CAN2 are not interconnected.

GCAN-208 typical application: chain (hand-in-hand) cascade

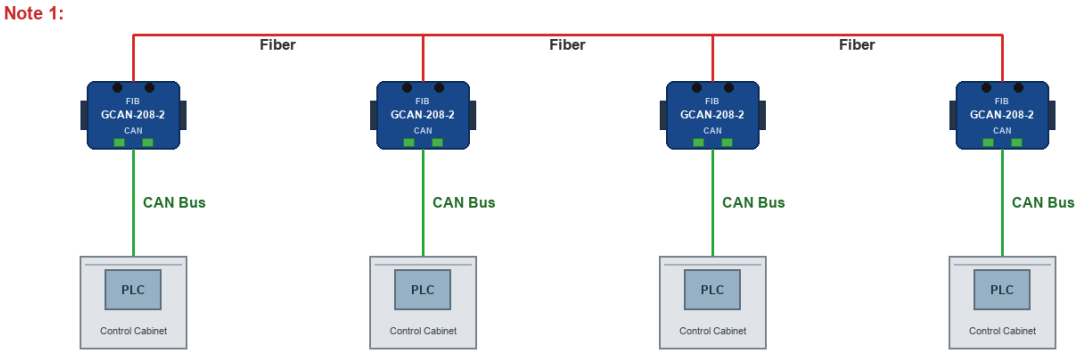

Figure 1.3 Chain cascade using GCAN-208-2 units

Note: For a chain cascade, all units may be GCAN-208-2 (Note 1), or GCAN-208-1 units may be used at both ends of the network (Note 2).

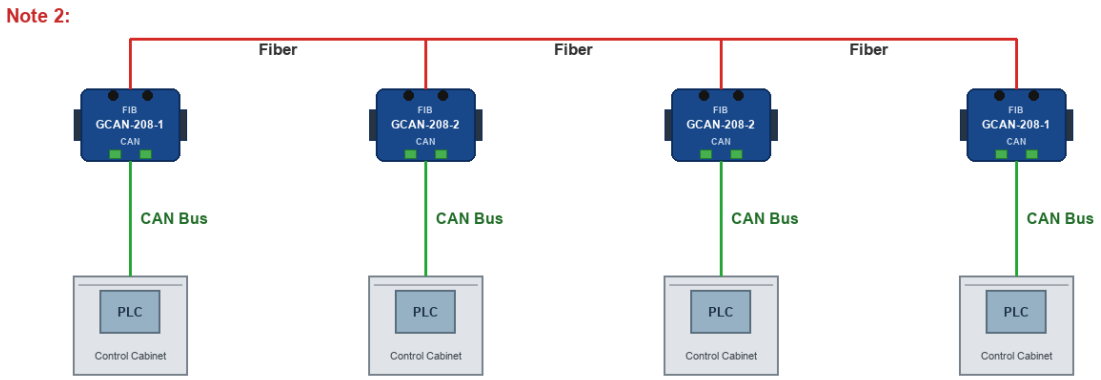

Figure 1.4 Chain cascade with GCAN-208-1 units at both ends

GCAN-208-2 F typical application: ring network

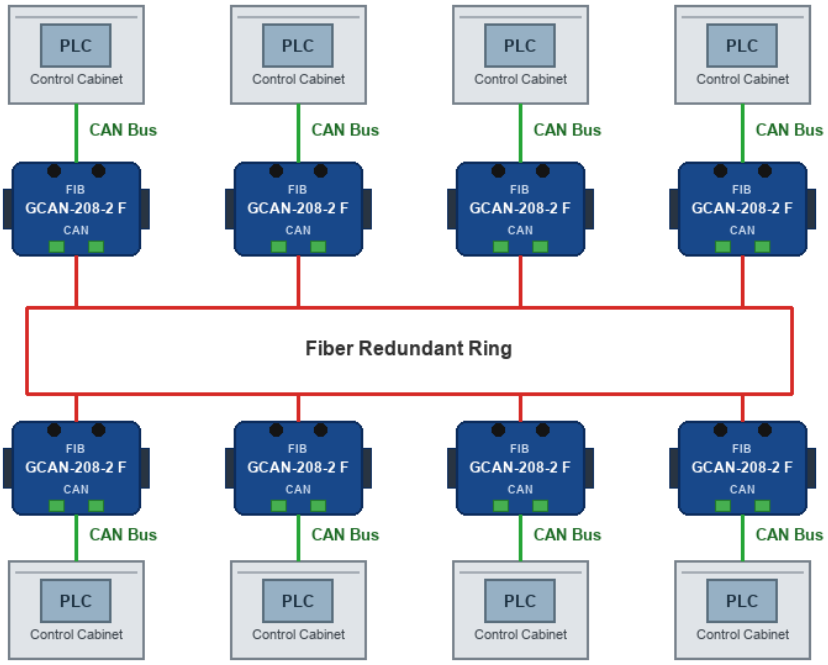

Figure 1.5 Fiber-optic ring network using GCAN-208-2 F

Note: In a ring network, GCAN-208-2 F units are used. If a single device or one line section fails, other devices in the system continue to communicate, ensuring stable and reliable operation.

1.6 Functional Features

1) The fiber-optic link of the GCAN-208 series completely isolates interference and prevents lightning, surges and electromagnetic interference from being introduced through the twisted pair.

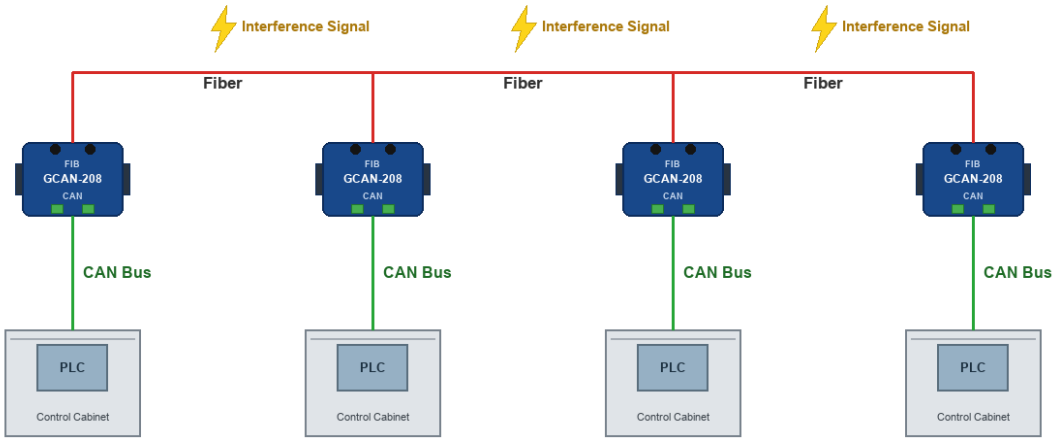

Figure 1.6 GCAN-208 interference isolation

2) The GCAN-208 series supports CAN-bus network repeating and expansion over a transmission distance of 20 km. It supports CAN networks with different baud rates from 5 kbps to 1 Mbps and any CAN-bus protocol, including CANopen, SAE J1939, DeviceNet and NMEA 2000.

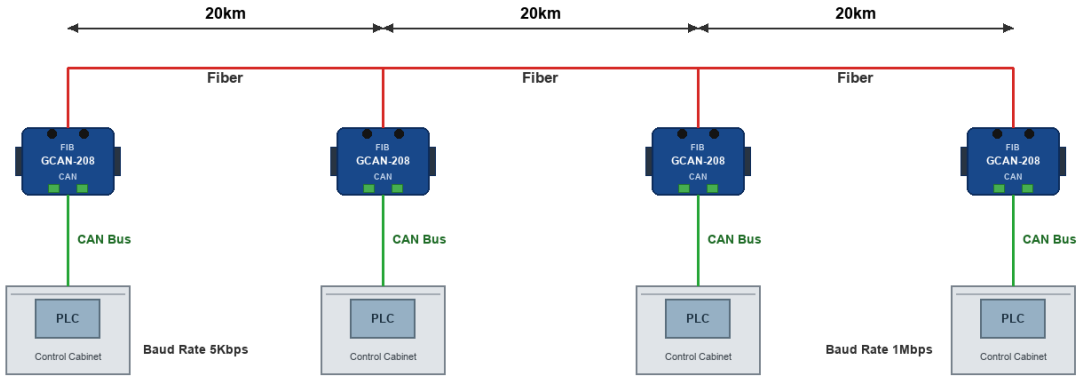

Figure 1.7 Communication distance and baud rate

3) The GCAN-208 series supports point-to-point, chain (hand-in-hand, bus and cascade), star, tree, ring and mixed network topologies.

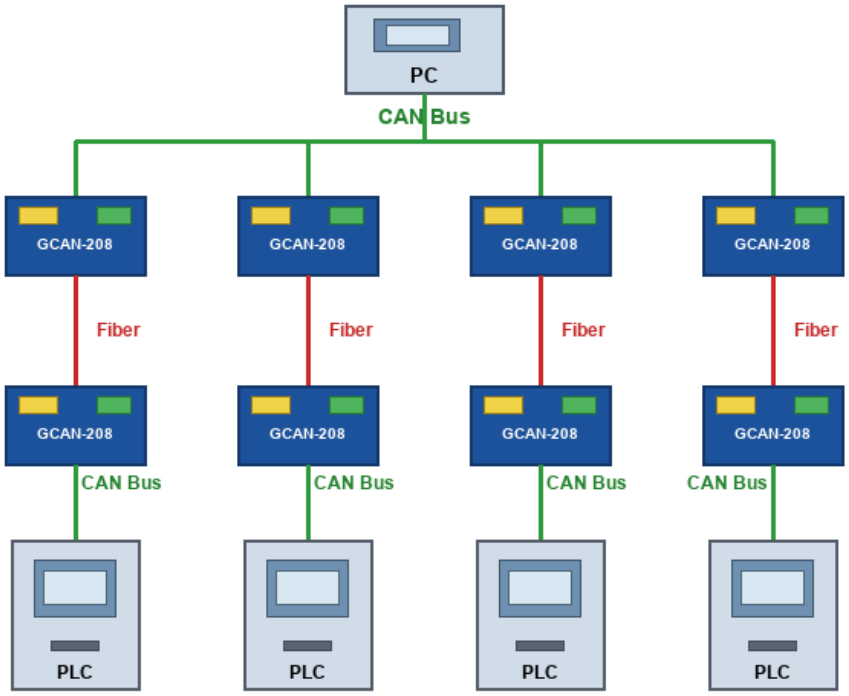

Figure 1.8 Tree network topology

2. Device Installation

2.1 Device Dimensions

The outline dimensions of the device are (length, including terminal block) 118 mm x (width) 93 mm x (height) 22 mm, as shown in Figure 2.1.

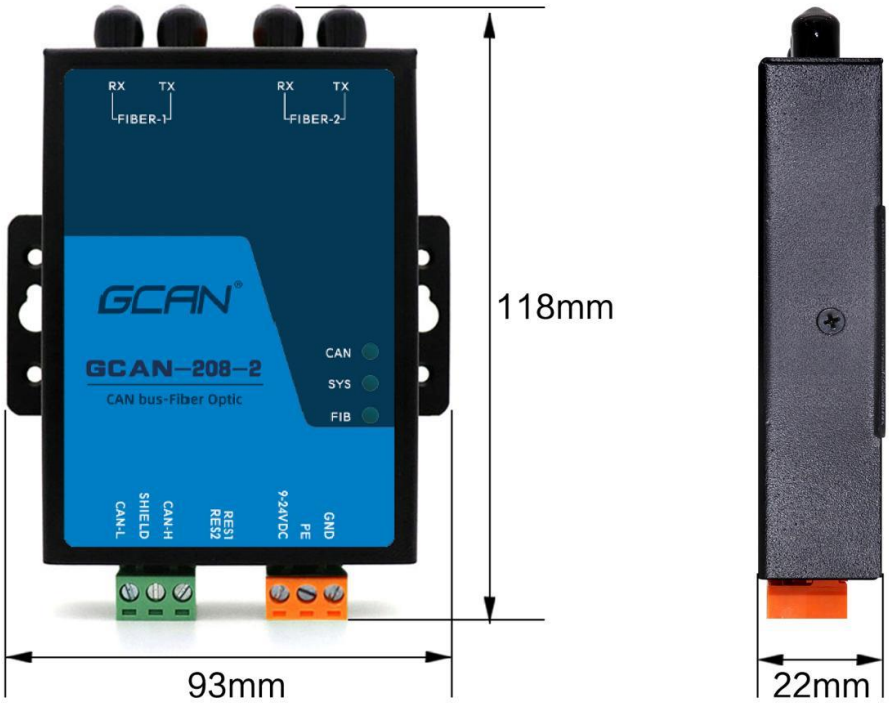

Figure 2.1 Outline dimensions of the GCAN-208

2.2 Device Mounting

The mechanical dimensions of the GCAN-208 series modules are shown in Figure 2.2. The module can be wall-mounted inside a cabinet, or mounted on a DIN rail using an optional DIN-rail accessory.

The PE terminal of the module is connected to the enclosure. If the cabinet or mounting rail is fixed to a grounded metal panel, the module is automatically grounded and no external ground wire is required. If the cabinet or mounting rail is fixed to an ungrounded base, the cabinet or rail must be connected to the nearest grounding terminal.

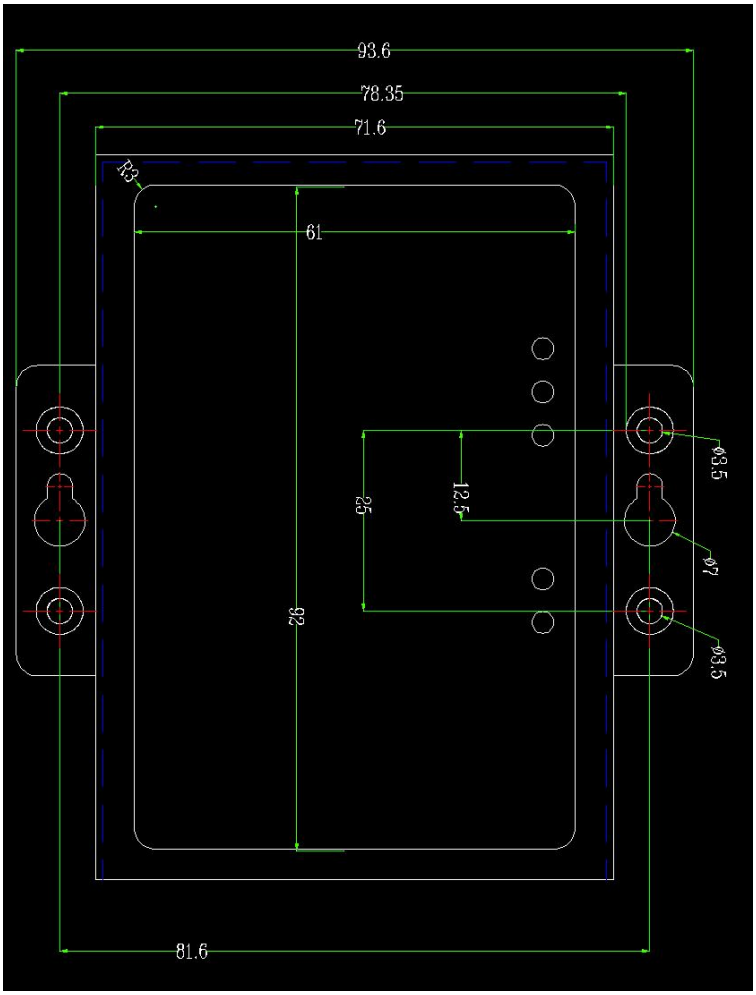

Figure 2.2 Mechanical dimensions of the GCAN-208 series modules

2.3 Interface Definition and Functions

2.3.1 GCAN-208-1 Module

The GCAN-208-1 integrates one 9-36 V DC power interface, two standard CAN-bus interfaces and one standard fiber-optic interface (single-mode or multimode; SC, ST or FC; single-fiber or dual-fiber optional).

The power interface of the GCAN-208-1 is brought out through a 3-pin pluggable terminal block (orange). The positions and definitions of the power and fiber-optic interfaces are shown in Figure 2.3 and Tables 2.1 and 2.2.



Figure 2.3 Power and fiber-optic interface positions of the GCAN-208-1

Pin (left to right)	Port	Name	Function
1	Power	9-24 V	Positive input of the 9-36 V DC supply
2	EARTH	EARTH	Shield; connect to earth
3	GND	GND	Negative input of the 9-36 V DC supply

Table 2.1 Power interface definition of the GCAN-208-1

Pin (left to right)	Port	Name	Function
1	Fiber interface	TX	Fiber transmitter
2	Fiber interface	RX	Fiber receiver

Table 2.2 Fiber-optic interface definition of the GCAN-208-1

The two CAN-bus interfaces of the GCAN-208-1 are brought out through two 3-pin pluggable terminal blocks (green). They can be used to connect two CAN-bus networks or CAN-bus devices. The interface positions and definitions are shown in Figure 2.4 and Table 2.3.



Figure 2.4 CAN-bus interfaces of the GCAN-208-1

Pin (left to right)	Port	Name	Function
1	CAN2	CAN2-L	CAN2_L signal line (CAN low)
2	EARTH	EARTH	Shield; connect to earth
3	CAN2	CAN2-H	CAN2_H signal line (CAN high)
-	DIP switch	Terminating resistor	See section 3.4
4	CAN1	CAN1-L	CAN1_L signal line (CAN low)
5	EARTH	EARTH	Shield; connect to earth
6	CAN1	CAN1-H	CAN1_H signal line (CAN high)

Table 2.3 CAN-bus signal assignment of the GCAN-208-1

2.3.2 GCAN-208-2 Module

The GCAN-208-2 integrates one 9-36 V DC power interface, one standard CAN-bus interface and two standard fiber-optic interfaces (single-mode or multimode; SC, ST or FC optional).

The CAN-bus interface of the GCAN-208-2 is brought out through one green 3-pin pluggable terminal block and can be used to connect one CAN-bus network or CAN-bus device. The power interface is brought out through one orange 3-pin pluggable terminal block. The interface positions and definitions are shown in Figure 2.5 and Table 2.4.



Figure 2.5 CAN-bus and power interface positions of the GCAN-208-2

Pin (left to right)	Port	Name	Function
1	CAN	CAN-L	CAN_L signal line (CAN low)
2	EARTH	EARTH	Shield; connect to earth
3	CAN	CAN-H	CAN_H signal line (CAN high)
-	DIP switch	Terminating resistor	See section 3.4
4	Power	9-24 V	Positive input of the 9-36 V DC supply
5	EARTH	EARTH	PE terminal; connect to earth
6	GND	GND	Negative input of the 9-36 V DC supply

Table 2.4 CAN-bus signal assignment and power interface of the GCAN-208-2

The fiber-optic interface positions and definitions of the GCAN-208-2 are shown in Figure 2.6 and Table 2.5.



Figure 2.6 Fiber-optic interface positions of the GCAN-208-2

Pin (left to right)	Port	Name	Function

Pin (left to right)	Port	Name	Function
1	Fiber interface 2	TX	Fiber transmitter
2	Fiber interface 2	RX	Fiber receiver
3	Fiber interface 1	TX	Fiber transmitter
4	Fiber interface 1	RX	Fiber receiver

Table 2.5 Fiber-optic interface definition of the GCAN-208-2

3. Device Usage

3.1 CAN-Bus Configuration

Before use, the GCAN-208 series modules generally require the user to configure the CAN-bus communication parameters, or the user may commission Guangcheng Technology to complete factory configuration.

3.1.1 Configuring the CAN-Bus Baud Rate with DIP Switches

When using a GCAN-208 module for the first time, if the CAN-bus baud rate is already known, open the enclosure (remove the two black side screws) and use the internal DIP switches to set the baud rate of the corresponding CAN bus. The DIP switches are shown in Figure 3.1.

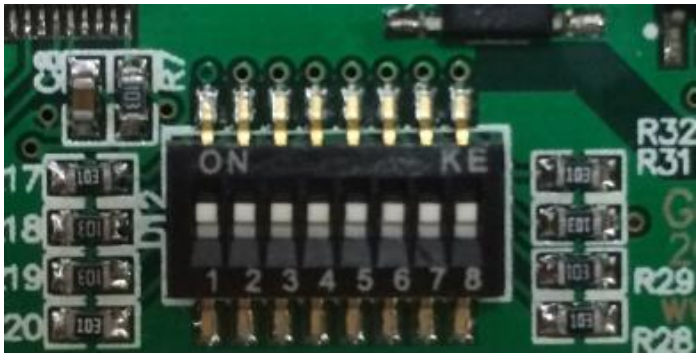

Figure 3.1 DIP switches

Baud-rate setting procedure: do not power on the system first. Open the enclosure with a screwdriver and locate the DIP switches shown above. Switches 1, 2, 3 and 4 configure the CAN1 baud rate; switches 5, 6, 7 and 8 configure the CAN2 baud rate. On devices with only one CAN channel, only the first four switches are effective. The configuration method is described for CAN1 in Table 3.1. The ON position is logic 0 and the numbered side is logic 1.

Note: Ring-network devices do not support a 1000 kbps baud rate.

Switch setting	Definition	Baud rate	Switch setting	Definition	Baud rate
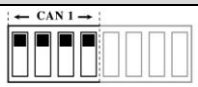	0000	1000k	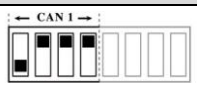	1000	100k
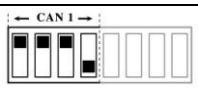	0001	800k		1001	80k
	0010	25k		1010	50k

Switch setting	Definition	Baud rate	Switch setting	Definition	Baud rate
	0011	500k		1011	40k
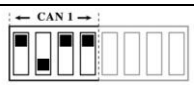	0100	400k	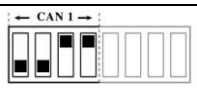	1100	20k
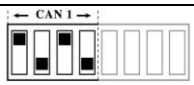	0101	250k		1111	13.33k
	0110	200k	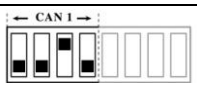	1101	10k
	0111	125k	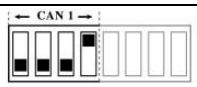	1110	5k

Table 3.1 Baud-rate configuration of the GCAN-208 series modules

3.1.2 Automatic Baud-Rate Detection

Note: The GCAN-208-1 cannot detect 10 kbps; this rate must be set with the DIP switches.

If the CAN-bus baud rate is unknown, or if the module does not operate correctly after the DIP-switch setting, the automatic baud-rate detection function can identify the actual bus baud rate as follows.

1. Set all baud-rate DIP switches of the GCAN-208 module to the numbered side.

2. Connect the GCAN-208 module correctly to the CAN bus (ensure correct wiring and that the terminating resistor is properly installed).

3. Power on the GCAN-208 module. When PWR is steadily on and SYS flashes, use a tool to press and hold the button in the hole on the left side of the CAN channel, as shown in Figure 3.2.

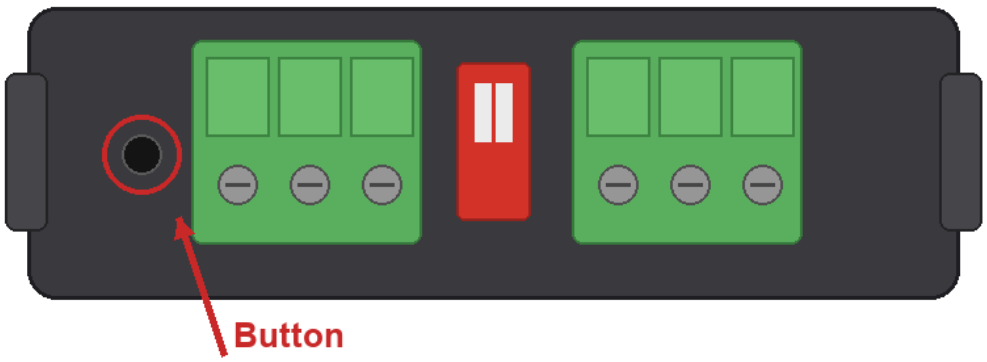

Figure 3.2 Button position

4. Hold the button in the hole for more than 3 seconds and then release it. The module now identifies the bus baud rate.

5. The identification process takes some time. When the CAN LED returns to steady green, identification is complete; power-cycle the module to use the detected baud rate. If the LED remains steadily red after flashing, identification has failed and the physical layer must be checked.

Note: After the module automatically detects the baud rate, the DIP switches become ineffective.

3.1.3 Checking the Current Baud Rate of the Device

To determine the baud rate currently used by the device, first open the enclosure (remove the two black side screws), then connect the USB-MINI port of the device to a computer with a USB cable, as shown in Figure 3.3.

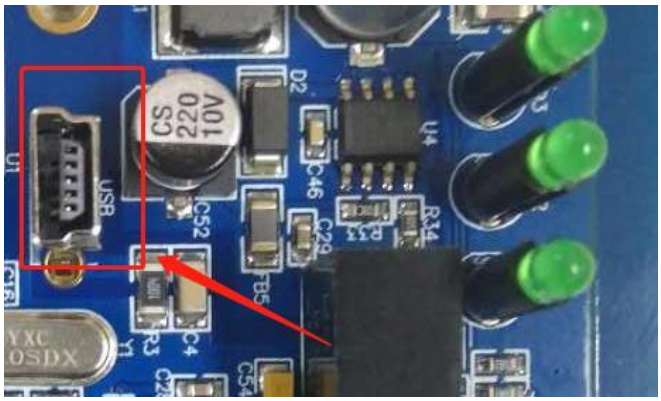

Figure 3.3 USB port

The computer then displays a removable disk, as shown in Figure 3.4.

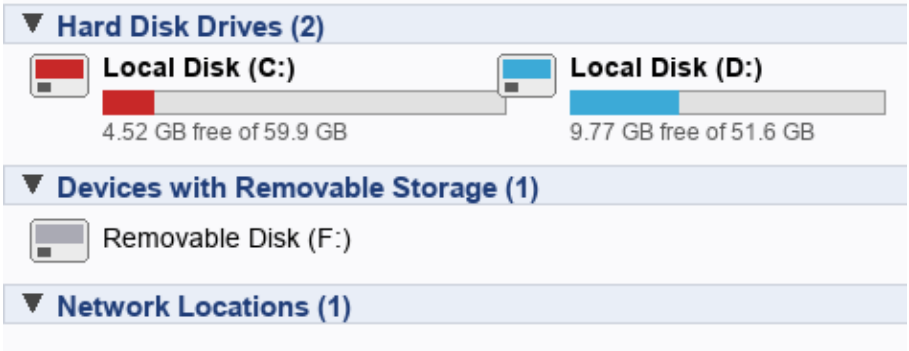

Figure 3.4 Removable disk

Open the disk. A Notepad file displays the current baud rate of the CAN channels, as shown in Figure 3.5.

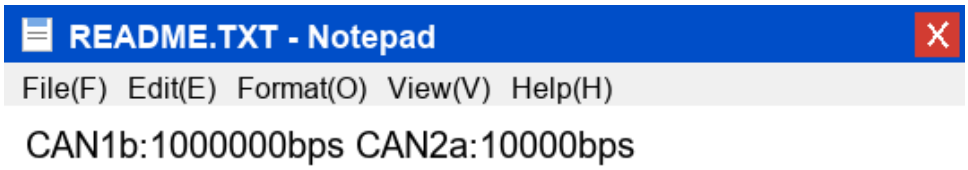

Figure 3.5 Baud-rate value

In "CAN1b", CAN1 represents CAN channel 1 and b indicates that the baud rate was configured by automatic detection. In "CAN2a", CAN2 represents CAN channel 2 and a indicates that the baud rate was configured with the DIP switches.

Cautions:

1. The Notepad file on the removable disk is read-only. It can only be viewed; the values in the file cannot be edited manually to change the device baud rate.

2. The GCAN-208-1 has two independent CAN buses. During automatic detection, CAN1 is detected first and CAN2 is detected after CAN1 is finished. If the CAN LED remains red without flashing, detection has failed; check the wiring and terminating resistor. After a failed detection, the module automatically uses the DIP-switch baud rate when powered on again.

Restore factory settings (clear the automatic-detection record): set all 8 DIP switches to the numbered side, power on the device, then press and hold the reset button until the CAN LED turns red and flashes, allowing the device to perform detection with no load connected. After all CAN channels fail detection, power-cycle the device to restore the factory settings.

3.1.4 Modifying the Device Baud Rate

To change the current baud rate of the device, follow the flowchart in Figure 3.6.

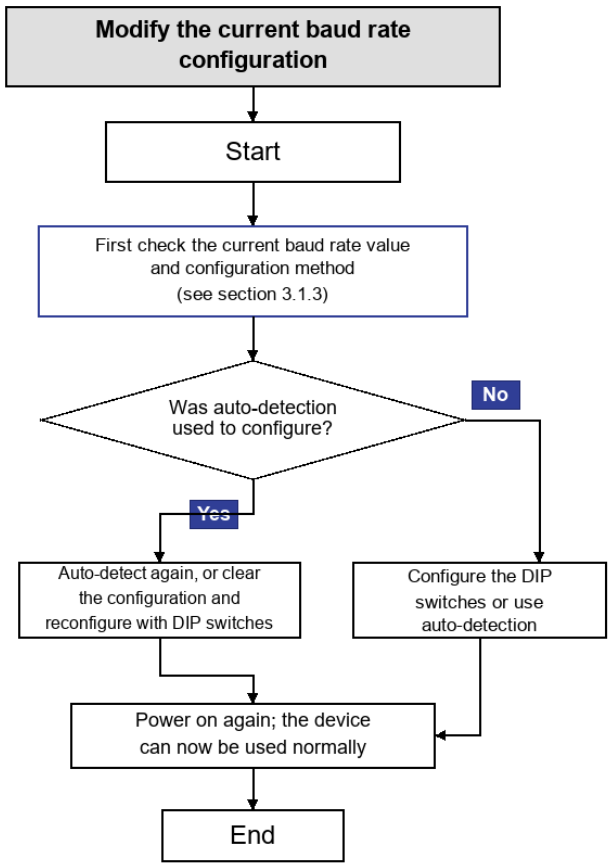

Figure 3.6 Flowchart for modifying the current baud rate

3.1.5 Configuring the CAN-Bus Terminating Resistor

Both CAN channels of the GCAN-208 series modules integrate a standard 120 ohm terminating resistor. The DIP switch between the two CAN-bus terminal blocks determines whether the resistor is connected.

3.2 Fiber-Optic Connection

The GCAN-208 series modules are available with SC or ST fiber-optic interfaces and with single-mode or multimode transmission. In practical use, the user only needs to select the corresponding fiber cable; the module is plug-and-play.

Note: For a dual-fiber connection, connect RX to TX and TX to RX. For a single-fiber connection, devices A and B must be paired.

3.3 CAN-Bus Connection

To connect a GCAN-208 series module to a CAN bus, connect CAN_H to CAN_H and CAN_L to CAN_L to establish communication.

The CAN-bus network uses a linear topology. The two most distant ends of the bus require 120 ohm terminating resistors; if there are more than two nodes, intermediate nodes do not require 120 ohm terminating resistors. Branch connections must not exceed 3 m. The CAN-bus connection is shown in Figure 3.7.

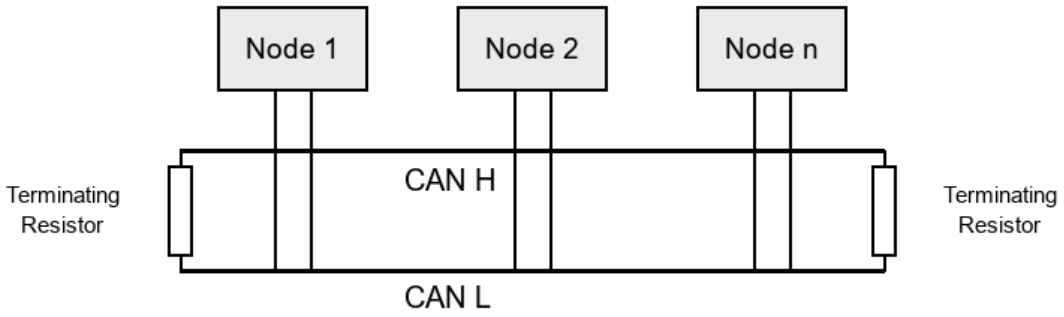

Figure 3.7 CAN-bus network topology

Ordinary twisted-pair or shielded twisted-pair cable can be used for the CAN bus. The theoretical maximum communication distance depends mainly on the bus baud rate; the relationship between maximum bus length and baud rate is listed in Table 3.2. If the communication distance exceeds 1 km, ensure that the conductor cross-section is larger than 1.0 mm2; the exact specification depends on the distance and is generally increased as the distance becomes longer.

Baud rate	Bus length
1 Mbit/s	25 m
500 kbit/s	100 m
250 kbit/s	250 m
125 kbit/s	500 m
50 kbit/s	1.0 km
20 kbit/s	2.5 km
10 kbit/s	5 km
5 kbit/s	13 km

Table 3.2 Baud rate and maximum bus length

3.4 CAN-Bus Terminating Resistor

To improve CAN communication reliability and eliminate signal-reflection interference at the bus ends, terminating resistors are generally installed at the two most distant endpoints of the CAN network, as shown in Figure 3.8. The terminating resistor value is determined by the characteristic impedance of the transmission cable. For example, if the characteristic impedance of the twisted pair is 120 ohms, a 120 ohm terminating resistor should be integrated at both bus endpoints. The GCAN-208 series modules use an 82C251 transceiver;

if other nodes on the network use different transceivers, the terminating resistor must be recalculated.

Each CAN channel of the GCAN-208 series modules integrates a standard 120 ohm terminating resistor, which can be connected to the bus by DIP switch. On the GCAN-208-1, R1 controls CAN1 and R2 controls CAN2; set the corresponding switch to ON to enable the resistor. On the GCAN-208-2, the two switches R1 and R2 control the same resistor; operate R1 and R2 together and set them to ON to enable the resistor.

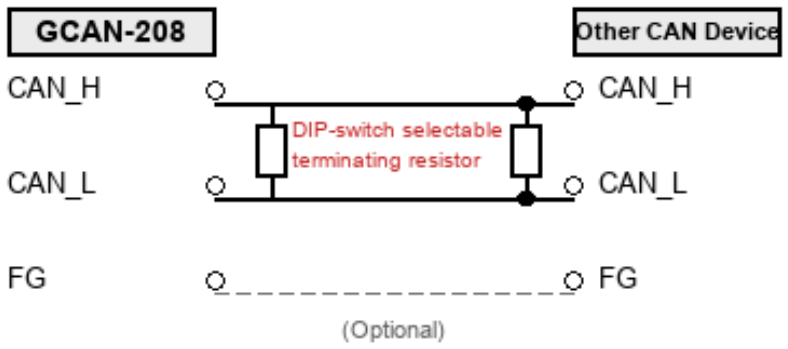

Figure 3.8 Connection between a GCAN-208 module and other CAN nodes

3.5 System Status LEDs

Each GCAN-208 series module has one PWR LED for the power supply, one SYS LED for the operating status, one FIB LED for fiber-optic data transmission, and two (or one) CAN LEDs for CAN-bus data transmission. The functions of these LEDs are listed in Table 3.3, and their status meanings are listed in Table 3.4.

LED	Color	Indication
PWR	Green	Power supply status
SYS	Green	System operating status
FIB	Green	Fiber-optic communication status
CAN1	Red / Green	CAN1 communication status
CAN2	Red / Green	CAN2 communication status

Table 3.3 LEDs of the GCAN-208 series modules

After the module is powered on, the PWR and SYS LEDs illuminate, indicating that the device is powered and the system is initializing. Otherwise, a power failure or a serious error has occurred.

When both the fiber-optic and CAN connections are normal, the corresponding FIB and CAN LEDs flash while data is transmitted between the CAN bus and the fiber-optic link.

LED	Status	Indication
PWR	Steady on	Device power supply normal
	Off	Device power supply abnormal
SYS	Off	System fault
	Steady on	System initialization failed
	Flashing	System initialization normal
FIB	Off or steady on	Fiber transmitting data or no data transmission

LED	Status	Indication
	Flashing	Fiber receiving data
CAN1 / CAN2	Off or steady on	No CAN-bus data transmission
	Green flashing	CAN-bus data transmission active
	Red	CAN-bus error

Table 3.4 LED status of the GCAN-208 series modules

4. Technical Specifications

Category	Item	Specification
Connection	Fiber optic	SC, ST or FC; single-mode or multimode; single-fiber or dual-fiber optional
	CAN	**OPEN3 terminal block**
Interface features	Fiber transmission mode	Single-mode or multimode optional
	CAN protocol	Compliant with ISO 11898; supports CAN 2.0A/B
	CAN baud rate	5 kbit/s - 1 Mbit/s, configured by DIP switch; automatic detection supported
	CAN isolation	Isolation withstand voltage 3000 V DC
	CAN terminating resistor	Integrated; connection selected by DIP switch
	Power isolation	1500 V DC
Power supply	**Supply voltage**	**+9 to +36 V DC**
	Supply current	50 mA max. (24 V DC)
Environmental test	Operating temperature	-40°C to +85°C
	Operating humidity	**15% - 90% RH, non-condensing**
EMC test	EMC standard	EN 55024:2011-09; EN 55022:2011-12
Protection	**Ingress protection**	**IP 20**
General	**Outline dimensions**	**118 mm x 93 mm x 22 mm**
	Weight	230 g

5. Frequently Asked Questions

1. Is a 120 ohm terminating resistor always required?

A 120 ohm terminating resistor is recommended to absorb endpoint reflections and provide a stable physical link. For a single-node self-transmit/self-receive test, the 120 ohm resistor must be connected to form a loop; otherwise the test cannot be performed. The GCAN-208 series modules integrate a 120 ohm terminating resistor, which can be connected by DIP switch.

2. Can multiple GCAN-208 series modules be installed on one CAN bus?

Because of the structure of a CAN bus, multiple CAN nodes can be connected to one bus. Therefore, provided that the bus is not adversely affected, multiple CAN-to-fiber modules may be installed on one CAN bus. The actual quantity depends on the maximum number of nodes supported by the CAN bus.

3. What is the maximum data conversion rate of the GCAN-208 series modules?

A single CAN channel of a GCAN-208 series module supports a maximum conversion rate of 8000 CAN frames/s. The frames referred to here are standard data frames with 8 bytes of data. Shorter frames or remote frames may be processed faster.

4. Why are the FIB and CAN LEDs off?

The FIB and CAN LEDs illuminate only when data is present on the fiber-optic or CAN side and the module is converting data.

5. How is the communication baud rate of the GCAN-208 series modules set?

A set of commonly used baud rates can be selected with the internal DIP switches. To use another baud rate, please contact the relevant personnel at Guangcheng Technology Co., Ltd.

6. Does the system entering standby or sleep mode affect reception?

Yes. All processing stops in that state, which may at worst cause a hardware receive-buffer overflow error. If a program keeps the device open, the system will attempt to prevent standby or sleep mode in order to maintain normal operation. When using the GCAN-208 series modules, disable the standby and sleep functions of the system.

6. Disclaimer

Thank you for purchasing GCAN series hardware and software products.

1. Copyright and Translation Notice

The original Chinese-language version of this document was prepared by Shenyang Guangcheng Technology Co., Ltd., which retains the copyright to the original document and its contents.

This English version has been independently translated and prepared by Shenzhen MoCAN Electric Co., Ltd. based on its understanding of the original Chinese documentation. It is intended solely for overseas customer reference and technical support purposes. It has not been officially reviewed, verified or approved by Shenyang Guangcheng Technology Co., Ltd., and should not be regarded as an official or authoritative English version of the original documentation.

The English translation, editorial work and original layout elements created by Shenzhen MoCAN Electric Co., Ltd. are protected by applicable copyright laws. No part of this English version may be reproduced, redistributed, republished or used for commercial purposes without prior written permission from Shenzhen MoCAN Electric Co., Ltd., except as permitted by applicable law.

GCAN is a registered trademark of Shenyang Guangcheng Technology Co., Ltd.

2. Product Information and User Responsibility

Product specifications, technical parameters, functions and other information provided in this document are for reference purposes and may be subject to change without prior notice.

Users are responsible for evaluating the suitability of the products for their specific applications and ensuring proper installation, configuration and operation in accordance with the relevant technical documentation and applicable safety requirements.

For product selection, technical clarification or application-specific requirements, users are advised to consult the manufacturer or an authorized supplier before making purchasing or implementation decisions.

3. Interpretation

This English document is provided as a reference translation of the original Chinese-language documentation. While reasonable efforts have been made to ensure the accuracy and consistency of the translation, differences in technical terminology, interpretation or expression may occur.

In the event of any discrepancy, ambiguity or inconsistency between this English version and the original Chinese-language documentation, the original Chinese-language version shall prevail.

For technical questions or clarification regarding the product specifications and intended functions, users are encouraged to contact Shenyang Guangcheng Technology Co., Ltd. or their authorized supplier.